TEST REPORT

Product Name	:	AiDiA
Brand Name	:	N/A
Model	:	WPT4
Series Model	:	NC
Applicant	:	**Textron Technolgy Ltd**
Address	:	University of the West Indies Mona, Kingston, Jamaica WI
Manufacturer	:	**Shenzhen Xinditai Electronics Co., Ltd.**
Address	:	3rd Floor, Building C, Tongju Industrial Park, No. 4 Longping West Road, Shengping Community, Longcheng Street, Longgang District, Shenzhen
Standard(s)	:	ETSI EN 300 328 V2.2.2 (2019-07)
Date of Receipt	:	Jan 27, 2025
Date of Test	:	Jan 27, 2025~ Feb 02, 2026
Issued Date	:	Mar 20, 2026

Issued By: **Guangdong Asia Hongke Test Technology Limited**
B1/F, Building 11, Junfeng Industrial Park, Chongqing Road, Heping Community, Fuhai Street, Bao'an District, Shenzhen, Guangdong, China
Tel.: +86 0755-230967639 Fax.: +86 0755-230967639

Reviewed by: Aaron.Ye **Approved by:** Allen Wang

Aalen.Ye Allen Wang

Note: This device has been tested and found to comply with the standard(s) listed, this test report merely corresponds to the test sample. It is not permitted to copy extracts of these test result without the written permission of the test laboratory. This report shall not be reproduced except in full, without the written approval of Guangdong Asia Hongke Test Technology Limited. If there is a need to alter or revise this document, the right belongs to Guangdong Asia Hongke Test Technology Limited, and it should give a prior written notice of the revision document. This test report must not be used by the client to claim product endorsement.

Report Revise Record

Report Version	Issued Date	Notes
M0	Mar 20, 2026	Initial Release

Contents

1 TEST SUMMARY 4

1.1 TEST STANDARDS 4
1.2 TEST SUMMARY 4
1.3 TEST FACILITY 5
1.4 MEASUREMENT UNCERTAINTY 5

2 GENERAL INFORMATION 6

2.1 ENVIRONMENTAL CONDITIONS 6
2.2 GENERAL DESCRIPTION OF EUT 6
2.3 RECEIVER CATEGORIES 6
2.4 DESCRIPTION OF TEST MODES AND TEST FREQUENCY 7
2.5 EQUIPMENTS LIST FOR THE TEST 7

3 TEST ITEM AND RESULTS 9

3.1 RF OUTPUT POWER 9
3.2 POWER SPECTRAL DENSITY 11
3.3 MEDIUM UTILISATION (MU) FACTOR 14
3.4 OCCUPIED CHANNEL BANDWIDTH 15
3.5 TRANSMITTER UNWANTED EMISSIONS IN THE OUT-OF-BAND DOMAIN 16
3.6 TRANSMITTER UNWANTED EMISSIONS IN THE SPURIOUS DOMAIN 17
3.7 RECEIVER SPURIOUS EMISSIONS 20
3.8 ADAPTIVITY 22
3.9 RECEIVER BLOCKING 24

4 TEST SETUP PHOTOS 28

5 PHOTOS OF THE EUT 29

1 TEST SUMMARY

1.1 Test Standards

The tests were performed according to following standards:
ETSI EN 300 328 V2.2.2 (2019-07)–Wideband transmission systems; Data transmission equipment operating in the 2,4 GHz ISM band and using wide band modulation techniques; Harmonised Standard for access to radio spectrum

1.2 Test Summary

Item	Reference	Result
Maximum transmit power	EN 300 328 V2.2.2 (2019-07) Sub-clause 4.3.2.2	PASS
Power Spectral Density	EN 300 328 V2.2.2 (2019-07) Sub-clause 4.3.2.3	PASS
Duty Cycle, Tx-sequence, Tx-gap	EN 300 328 V2.2.2 (2019-07) Sub-clause 4.3.2.4	N/A$_{note1}$
Medium Utilisation (MU) factor	EN 300 328 V2.2.2 (2019-07) Sub-clause 4.3.2.5	N/A$_{note1}$
Adaptively	EN 300 328 V2.2.2 (2019-07) Sub-clause 4.3.2.6	N/A$_{note2}$
Occupied Channel Bandwidth	EN 300 328 V2.2.2 (2019-07) Sub-clause 4.3.2.7	PASS
Transmitter unwanted emissions in the out-of-band domain	EN 300 328 V2.2.2 (2019-07) Sub-clause 4.3.2.8	PASS
Transmitter unwanted emissions in the spurious domain	EN 300 328 V2.2.2 (2019-07) Sub-clause 4.3.2.9	PASS
Receiver spurious emissions	EN 300 328 V2.2.2 (2019-07) Sub-clause 4.3.2.10	PASS
Receiver Blocking	EN 300 328 V2.2.2 (2019-07) Sub-clause 4.3.2.11	PASS
Geo-location capability	EN 300 328 V2.2.2 (2019-07) Sub-clause 4.3.2.12	N/A$_{note3}$

Note1: This requirement does not apply to adaptive equipment.
Note2: Which is not applicable to device with a maximum RF Output power level is less than 10 dBm e.i.r.p.
Note3: This equipment without geo-location capability function.

1.3 Test Facility

Test Laboratory:
Guangdong Asia Hongke Test Technology Limited
B1/F, Building 11, Junfeng Industrial Park, Chongqing Road, Heping Community, Fuhai Street, Bao'an District, Shenzhen, Guangdong, China

The test facility is recognized, certified or accredited by the following organizations:

FCC-Registration No.: 251906 Designation Number: CN1376
Guangdong Asia Hongke Test Technology Limited has been registered and fully described in a report filed with the (FCC) Federal Communications Commission. The acceptance letter from the FCC is maintained in our files.

IC —Registration No.: 31737 CAB identifier: CN0165
The 3m Semi-anechoic chamber of Guangdong Asia Hongke Test Technology Limited has been registered by Certification and Engineering Bureau of Industry Canada for radio equipment testing with Registration No.: 31737

A2LA-Lab Cert. No.: 7133.01
Guangdong Asia Hongke Test Technology Limited has been accredited by A2LA for technical competence in the field of electrical testing, and proved to be in compliance with ISO/IEC 17025: 2017 General Requirements for the Competence of Testing and Calibration Laboratories and any additional program requirements in the identified field of testing.

1.4 Measurement uncertainty

The data and results referenced in this document are true and accurate. The reader is cautioned that there may be errors within the calibration limits of the equipment and facilities. The measurement uncertainty was calculated for all measurements listed in this test report according to CISPR 16 - 4 “Specification for radio disturbance and immunity measuring apparatus and methods – Part 4: Uncertainty in EMC Measurements” and is documented in the Guangdong Asia Hongke Test Technology Limited’s quality system according to DIN EN ISO/IEC 17025. Furthermore, component and process variability of devices similar to that tested may result in additional deviation. The manufacturer has the sole responsibility of continued compliance of the device.
Hereafter the best measurement capability for Asia Hongke laboratory is reported:

Test	Measurement Uncertainty	Notes
Power Line Conducted Emission	150KHz~30MHz ±1.20 dB	(1)
Disturbance Power Emission	30MHz~300MHz ±2.96 dB	(1)
Radiated Emission Test	9KHz~1GHz ±3.75 dB	(1)
Radiated Emission Test	1GHz~18GHz ±3.88 dB	(1)
RF power, conducted	30MHz~6GHz ±0.16dB	(1)
RF power density, conducted	±0.24dB	(1)
Spurious emissions, conducted	±0.21dB	(1)
Bandwidth	$\pm 1.5 \times 10^{-6}$	(1)
Temperature	±1℃	(1)
Humidity	±3%	(1)
DC and low frequency voltages	±1.5%	(1)
Time	±2%	(1)
Duty cycle	±2%	(1)

The report uncertainty of measurement y ± U, where expended uncertainty U is based on a standard uncertainty Multiplied by a coverage factor of k=2, providing a level of confidence of approximately 95%

2 GENERAL INFORMATION

2.1 Environmental conditions

During the measurement the environmental conditions were within the listed ranges:

Temperature	Normal Temperature:	25°C
	High Temperature:	55°C
	Low Temperature:	-10°C
Voltage	Normal Voltage	DC:3.7V
	High Voltage	DC:4.07V
	Low Voltage	DC:3.33V
Other	Relative Humidity	55 %
	Air Pressure	101 kPa

2.2 General Description of EUT

Product Name:	AiDiA
Model/Type reference:	WPT4
Serial Model:	NC
Power Supply:	All models are same as the samples except model name, all the models are electrical identical same mechanical structure and design.
Hardware Version:	DC 3.7V from battery or DC 5V from external circuit
Software Version:	N/A
Bluetooth LE:	
Supported type:	Bluetooth Low Energy
Modulation:	GFSK
Operation frequency:	2402MHz to 2480MHz
Channel number:	40
Channel separation:	2 MHz
Antenna type:	PCB antenna
Antenna gain:	0dBi
Remark: The above DUT's information was declared by manufacturer. For more detailed features description, please refer to the manufacturer's specifications or the User's Manual.	

2.3 Receiver categories

This device belongs to the receiver categories as the choice box selected:

	Categorization	Note
☐	Receiver category 1	Adaptive equipment with a maximum RF output power greater than 10 dBm e.i.r.p.
☒	Receiver category 2	Adaptive equipment with a maximum RF output power of 10 dBm e.i.r.p.
☐	Receiver category 3	Adaptive equipment with a maximum RF output power of 0 dBm e.i.r.p.

2.4 Description of Test Modes and Test Frequency

The EUT has been tested under typical operating condition. The Applicant provides communication tools software to control the EUT for staying in continuous transmitting and receiving mode for testing.

Operation Frequency List：

Channel	Frequency (MHz)
00	**2402**
01	2404
02	2406
⋮	⋮
19	**2440**
⋮	⋮
37	2476
38	2478
39	**2480**

Note: The line display in grey were the channel selected for testing

2.5 Equipments List for the Test

RF Conducted measurement					
Test Equipment	**Manufacturer**	**Model No.**	**Serial No.**	**Last Cal.**	**Cal.Due**
Spectrum Analyzer	Agilent	N9020A	MY53421570	2025.09.23	2026.09.22
Power Sensor	Agilent	8481A	MY41097697	2025.09.23	2026.09.22
Vector Signal Generator	Agilent	N5182A	MY50143009	2025.09.23	2026.09.22
Analog signal generator	Agilent	E8257	MY51554256	2025.09.23	2026.09.22
Const Temp. & Humidity Chamber	Eastlab	YH-HW-408L	23051109	2025.09.23	2026.09.22
Wideband Radio communication tester	R&S	CMW500	1201.0002K50	2025.09.23	2026.09.22
DC power supply	ZHAOXIN	RXN-305D-2	28070002559	2025.09.23	2026.09.22
RF Test box	TST	TSTPASS	21033016	2025.09.23	2026.09.22
RF Software	TST	TSTPASS	Version 2.0	N/A	N/A

Radiation Emission measurement					
Test Equipment	**Manufacturer**	**Model No.**	**Serial No.**	**Last Cal.**	**Cal.Due**
Low Noise Pre Amplifier	SCHWARZBECK	BBV 9745	00282	2025.09.23	2026.09.22
Low Noise Pre Amplifier	CESHENG	CSKJLNA23 1016A	CSKJLNA231016 A	2025.09.23	2026.09.22
Spectrum Analyzer	R&S	FSV40	101470	2025.09.23	2026.09.22
Loop Antenna	ETS	6512	00165355	2024.08.29	2027.08.28
TRILOG Super Broadband test Antenna	SCHWARZBECK	VULB9168	01434	2024.08.29	2027.08.28
Broadband Horn Antenna	Schwarzbeck	BBHA 9120D	452	2024.08.29	2027.08.28
Horn Antenna 15-40GHz	SCHWARZBECK	BBHA9170	BBHA9170367	2024.08.28	2027.08.27
Wideband Radio communication tester	R&S	CMW500	1201.0002K50	2025.09.23	2026.09.22
6dB Attenuator	JFW	50FPE-006	4360846-949-1	2025.09.23	2026.09.22
RE Software	EZ	EZ-EMC_RE	Ver.AIT-03A	N/A	N/A

3 TEST ITEM AND RESULTS

3.1 RF Output Power

Limit

EN 300 328 V2.2.2 (2019-07) Sub-clause 4.3.2.2.3

TEST CONDITION	LIMIT
Normal and Extreme	20dBm(e.i.r.p)

Test Procedure

- Step 1: Use a fast power sensor suitable for 2,4 GHz and capable of minimum 1 MS/s. Use the following settings:
  - Sample speed 1 MS/s or faster.
  - The samples shall represent the RMS power of the signal.
  - Measurement duration: For non-adaptive equipment: equal to the observation period. For adaptive equipment, the measurement duration shall be long enough to ensure a minimum number of bursts (at least 10) are captured.

NOTE 1: For adaptive equipment, to increase the measurement accuracy, a higher number of bursts may be used.

- Step 2:For conducted measurements on devices with one transmit chain:
  -Connect the power sensor to the transmit port, sample the transmit signal and store the raw data. Use these stored samples in all following steps.

For conducted measurements on devices with multiple transmit chains:

- Connect one power sensor to each transmit port for a synchronous measurement on all transmits ports.
- Trigger the power sensors so that they start sampling at the same time. Make sure the time difference between the samples of all sensors is less than 500 ns.
- For each individual sampling point (time domain), sum the coincident power samples of all ports and store them. Use these summed samples in all following steps.

- Step 3: Find the start and stop times of each burst in the stored measurement samples.
  The start and stop times are defined as the points where the power is at least 30 dB below the highest value of the stored samples in step 2.

NOTE 2: In case of insufficient dynamic range, the value of 30 dB may need to be reduced appropriately.

- Step 4: Between the start and stop times of each individual burst calculate the RMS power over the burst using the formula below. Save these P_{burst} values, as well as the start and stop times for each burst.

$$P_{burst} = \frac{1}{k}\sum_{n=1}^{k} P_{sample}(n)$$

With 'k' being the total number of samples and 'n' the actual sample number

- Step 5: The highest of all P_{burst} values (value "A" in dBm) will be used for maximum e.i.r.p. calculations.
- Step 6: Add the (stated) antenna assembly gain "G" in dBi of the individual antenna. If applicable, add the additional beamforming gain "Y" in dB using the formula below:

$$P = A + G + Y$$

Test Results

Raw data reference to Appendix Test Data for BT_BLE.

3.2 Power Spectral Density

Limit

EN 300 328 V2.2.2 (2019-07) Sub-clause 4.3.2.3.3

The maximum Power Spectral Density for non-FHSS equipment is 10 dBm per MHz.

Test Procedure

Option 1: For equipment with continuous and non-continuous transmissions

The transmitter shall be connected to a spectrum analyser and the Power Spectral Density (PSD) as defined in clause 4.3.2.3 shall be measured and recorded.

The test procedure shall be as follows:
Step 1:
Connect the UUT to the spectrum analyser and use the following settings:
• Start Frequency: 2 400 MHz
• Stop Frequency: 2 483,5 MHz
• Resolution BW: 10 kHz
• Video BW: 30 kHz
• Sweep Points: > 8 350; for spectrum analysers not supporting this number of sweep points, the frequency band may be segmented
• Detector: RMS
• Trace Mode: Max Hold
• Sweep time: For non-continuous transmissions: 2 × Channel Occupancy Time × number of sweep points, For continuous transmissions: 10 s; the sweep time may be increased further until a value where the sweep time has no further impact anymore on the RMS value of the signal.
For non-continuous signals, wait for the trace to stabilize. Save the data (trace data) set to a file.

Step 2:
For conducted measurements on smart antenna systems using either operating mode 2 or operating mode 3 (see clause 5.3.2.2), repeat the measurement for each of the transmit ports. For each sampling point (frequency domain), add up the coincident power values (in mW) for the different transmit chains and use this as the new data set.

Step 3:
Add up the values for power for all the samples in the file using the formula below.

$$P_{Sum} = \sum_{n=1}^{k} P_{sample}(n)$$

with k being the total number of samples and n the actual sample number

Step 4:
Normalize the individual values for power (in dBm) so that the sum is equal to the RF Output Power (e.i.r.p.) measured in clause 5.4.2 and save the corrected data. The following formulas can be used:

$$C_{Corr} = P_{Sum} - P_{e.i.r.p.}$$

$$P_{Samplecorr}(n) = P_{Sample}(n) - C_{Corr}$$

with n being the actual sample number

Step 5:
Starting from the first sample $P_{Samplecorr}(n)$ (lowest frequency), add up the power (in mW) of the following samples representing a 1 MHz segment and record the results for power and position (i.e. sample #1 to sample #100). This is the Power Spectral Density (e.i.r.p.) for the first 1 MHz segment which shall be recorded.

Step 6:
Shift the start point of the samples added up in step 5 by one sample and repeat the procedure in step 5 (i.e. sample #2 to sample #101).

Step 7:
Repeat step 6 until the end of the data set and record the Power Spectral Density values for each of the 1 MHz segments. From all the recorded results, the highest value is the maximum Power Spectral Density (PSD) for the UUT. This value, which shall comply with the limit given in clause 4.3.2.3.3, shall be recorded in the test report.

Option 2: For equipment with continuous transmission capability or for equipment operating (or with the capability to operate) with a constant duty cycle (e.g. Frame Based equipment)

This option is for equipment that can be configured to operate in a continuous transmit mode (100 % DC) or with a constant Duty Cycle (DC).

Step 1:
• Connect the UUT to the spectrum analyser and use the following settings:
- Centre Frequency: The centre frequency of the channel under test
- RBW: 1 MHz
- VBW: 3 MHz
- Frequency Span: 2 × Nominal Bandwidth (e.g. 40 MHz for a 20 MHz channel)
- Detector Mode: Peak
- Trace Mode: Max Hold

Step 2:
• When the trace is complete, find the peak value of the power envelope and record the frequency.

Step 3:
• Make the following changes to the settings of the spectrum analyser:
- Centre Frequency: Equal to the frequency recorded in step 2
- Frequency Span: 3 MHz
- RBW: 1 MHz
- VBW: 3 MHz
- Sweep Time: 1 minute
- Detector Mode: RMS
- Trace Mode: Max Hold

Step 4:
• Wait until the trace has stabilized, the trace shall be captured using the "Hold" or "View" option on the spectrum analyser.
• Find the peak value of the trace and place the analyser marker on this peak. This level is recorded as the highest mean power (power spectral density) D in a 1 MHz band.
• Alternatively, where a spectrum analyser is equipped with a function to measure power spectral density, this function may be used to display the power spectral density D in dBm / MHz.
• In case of conducted measurements on smart antenna systems operating in a mode with multiple transmit chains active simultaneously, the power spectral density of each transmit chain shall be measured separately to calculate the total power spectral density (value D in dBm / MHz) for the UUT.

Step 5:
• The maximum Power Spectral Density (PSD) e.i.r.p. is calculated from the above measured power spectral density D, the observed Duty Cycle (DC), the applicable antenna assembly gain G in dBi and if applicable the beamforming gain Y in dB, according to the formula below. The Duty Cycle (DC) can be determined using the procedure defined in clause 5.4.2.2.1.3). This value shall be recorded in the test report. If more than one antenna assembly is intended for this power setting, the gain of the antenna assembly with the highest gain shall be used.
PSD = D + G + Y + 10 × log (1 / DC) (dBm / MHz)

Test Result

Raw data reference to Appendix Test Data for BT_BLE.

3.3 Medium Utilisation (MU) factor

Limit

EN 300 328 V2.2.2 (2019-07) Sub-clause 4.3.2.5.3

The maximum Medium Utilisation factor for non-adaptive equipment shall be 10 %.

Definition

The Medium Utilisation (MU) factor is a measure to quantify the amount of resources (Power and Time) used by non-adaptive equipment. The Medium Utilisation factor is defined by the formula:

$$MU = (P/100\ mW) \times DC$$

Where: MU is Medium Utilisation factor in %.

P is the RF output power expressed in mW.

DC is the Duty Cycle expressed in %.

NOTE: The equipment may have dynamic behaviour with regard to duty cycle and corresponding power level.

Test Results

Not applicable to this device which cannot operation in a non-adaptive mode.

3.4 Occupied Channel Bandwidth

Limit

EN 300 328 V2.2.2 (2019-07) Sub-clause 4.3.2.7.3

The Occupied Channel Bandwidth for each hopping frequency shall fall completely within the band 2.4GHz-2.4835GHz.

Test Procedure

1. The measurement shall be performed only on the lowest and the highest frequency within stated frequency range
2. The test procedure shall be follows:

Step1: Connect the UUT to the spectrum analyzer and use the following settings

Centre Frequency:	The centre frequency of the channel under test
Resolution BW:	~ 1% of the span without going below 1 %
Video BW:	3 × RBW
Frequency Span:	2 × Occupied Channel Bandwidth (e.g. 40 MHz for a 20 MHz channel)
Detector Mode:	RMS
Trace Mode:	MaxHold
Sweep time:	1s

Step 2: Wait until the trace is completed. Find the peak value of the trace and place the analyzer marker on this peak.

Step 3: Use the 99 % bandwidth function of the spectrum analyzer to measure the Occupied Channel Bandwidth of the EUT.

Test Result

Raw data reference to Appendix Test Data for BT_BLE.

3.5 Transmitter unwanted emissions in the out-of-band domain

Limit

EN 300 328 V2.2.2 (2019-07) Sub-clause 4.3.2.8.3

The transmitter unwanted emissions in the out-of-band domain but outside the allocated band, shall not exceed the values provided by the mask in figure 3.

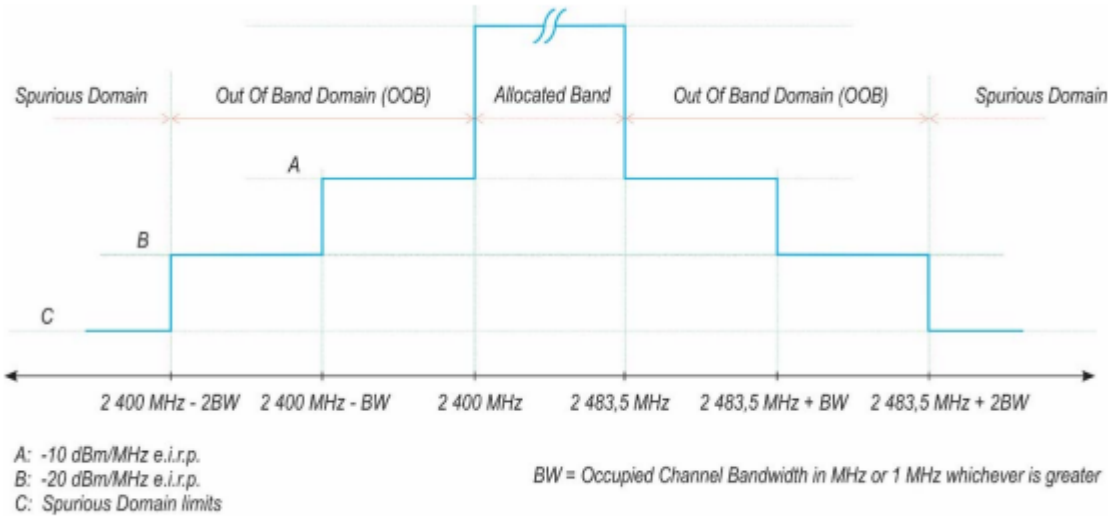

Figure 3: Transmit mask

Test Procedure

1. The measurements shall be performed at both normal environmental conditions and at the extremes of the operating temperature range.
2. For conducted measurements on devices with multiple transmit chains using the results for each of the transmit chains for the corresponding 1MHz segments shall be added and compared with the transmit mask limit.
3. The analyzer shall be set as follows:

Centre Frequency:	Center of each segments
Frequency Span:	0 Hz
RBW:	1M
VBW:	3M
Filter mode:	Channel filter
Trace Mode:	Clear / Write
Detector Mode:	RMS
Number of sweep points:	5 000
Sweep mode:	Continuous
Trigger:	Video trigger
Sweep Time:	> 120 % of the duration of the longest burst detected

4. Save the value measured of each segments.

Test Result

Raw data reference to Appendix Test Data for BT_BLE.

3.6 Transmitter unwanted emissions in the spurious domain

Limit

EN 300 328 V2.2.2 (2019-07) Sub-clause 4.3.2.9.3

The transmitter unwanted emissions in the spurious domain shall not exceed the values given in table 4. In case of equipment with antenna connectors, these limits apply to emissions at the antenna port (conducted). For emissions radiated by the cabinet or emissions radiated by integral antenna equipment (without antenna connectors), these limits are e.r.p. for emissions up to 1 GHz and e.i.r.p. for emissions above 1 GHz.

Table 4: Transmitter limits for spurious emissions

Frequency range	Maximum power	Bandwidth
30 MHz to 47 MHz	-36 dBm	100 kHz
47 MHz to 74 MHz	-54 dBm	100 kHz
74 MHz to 87,5 MHz	-36 dBm	100 kHz
87,5 MHz to 118 MHz	-54 dBm	100 kHz
118 MHz to 174 MHz	-36 dBm	100 kHz
174 MHz to 230 MHz	-54 dBm	100 kHz
230 MHz to 470 MHz	-36 dBm	100 kHz
470 MHz to 694 MHz	-54 dBm	100 kHz
694 MHz to 1 GHz	-36 dBm	100 kHz
1 GHz to 12,75 GHz	-30 dBm	1 MHz

Test Procedure

1. The measurement performed at the lowest and the highest channel on which the equipment can operate.
2. The EUT was placed on a turntable with 1.5m height.
3. The test distance between the receiving antenna and the EUT is 3 meter, while the receiving (test) antenna is kept at 1.5 meter height.
4. Set EUT in continuous transmitting with maximum output power.
5. The table was rotated from 0 to 360 degree to search the highest radiated emission.
6. Repeat step 3 to 5 for each polarization and channel to find the worst emission level.
7. The results obtained are compared to the limits in order to prove compliance with the requirement.

Test Configuration

Effective Radiated Power measurement (30 MHz to 12.75 GHz)

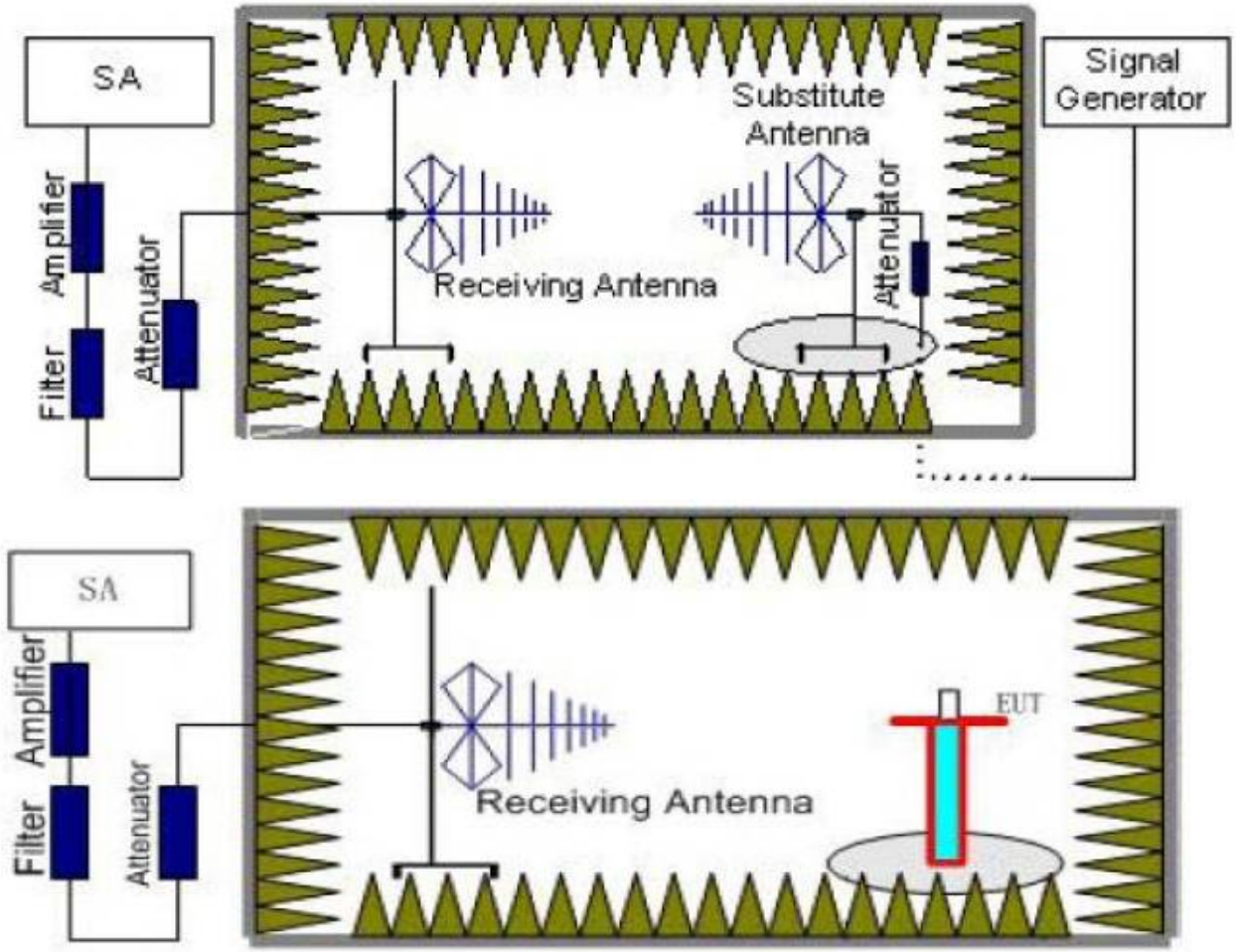

Test Results

Remark: We test all modulation type, and recorded the worst case at BLE 1M mode.

2402MHz

Frequency (MHz)	Result (dBm)	Factor (dB)	Result (dBm)	Limit (dBm)	Margin (dB)	ANT	Verdict
51.07	-66.05	-4.75	-70.80	-54	-16.80	Horizontal	Pass
327.47	-57.68	-4.00	-61.68	-36	-25.68	Horizontal	Pass
589.31	-68.50	1.62	-66.88	-54	-12.88	Horizontal	Pass
890.33	-67.74	6.28	-61.46	-36	-25.46	Horizontal	Pass
4804.85	-47.01	4.22	-42.79	-30	-12.79	Horizontal	Pass
7205.25	-49.63	10.14	-39.49	-30	-9.49	Horizontal	Pass
--	--	--	--	--	--	--	-
52.98	-68.39	-4.92	-73.31	-54	-19.31	Vertical	Pass
103.56	-55.17	-8.29	-63.46	-54	-9.46	Vertical	Pass
227.24	-58.79	-7.02	-65.81	-54	-11.81	Vertical	Pass
544.95	-64.59	0.61	-63.98	-54	-9.98	Vertical	Pass
4804.85	-46.39	4.22	-42.17	-30	-12.17	Vertical	Pass
7205.25	-49.54	10.14	-39.40	-30	-9.40	Vertical	Pass
--	--	--	--	--	--	--	-

2480MHz

Frequency (MHz)	Result (dBm)	Factor (dB)	Result (dBm)	Limit (dBm)	Margin (dB)	ANT	Verdict
82.73	-60.73	-9.18	-69.91	-36	-33.91	Horizontal	Pass
434.37	-67.10	-1.68	-68.78	-36	-32.78	Horizontal	Pass
628.29	-66.70	2.26	-64.44	-54	-10.44	Horizontal	Pass
767.21	-67.21	4.31	-62.90	-36	-26.90	Horizontal	Pass
4960.45	-49.37	6.00	-43.37	-30	-13.37	Horizontal	Pass
7439.55	-46.84	11.27	-35.57	-30	-5.57	Horizontal	Pass
--	--	--	--	--	--	--	-
75.94	-65.59	-8.23	-73.82	-36	-37.82	Vertical	Pass
307.01	-59.05	-4.47	-63.52	-36	-27.52	Vertical	Pass
743.96	-77.91	3.94	-73.97	-36	-37.97	Vertical	Pass
911.52	-79.89	6.53	-73.36	-36	-37.36	Vertical	Pass
4960.45	-49.15	6.00	-43.15	-30	-13.15	Vertical	Pass
7439.55	-46.76	11.27	-35.49	-30	-5.49	Vertical	Pass
--	--	--	--	--	--	-	-

3.7 Receiver spurious emissions

LIMIT

EN 300 328 V2.2.2 (2019-07) Sub-clause 4.3.2.10.3
The spurious emissions of the receiver shall not exceed the values given below:

Spurious emission limits for receivers

Frequency	Maximum power, e.r.p.	Measurement bandwidth
30 MHz to 1 GHz	-57 dBm	100 KHz
30 MHz to 12.75 GHz	-47 dBm	1 MHz

Test Procedure

The same as clause 3.6

Test Configuration

Effective Radiated Power measurement (30 MHz to 12.75 GHz)

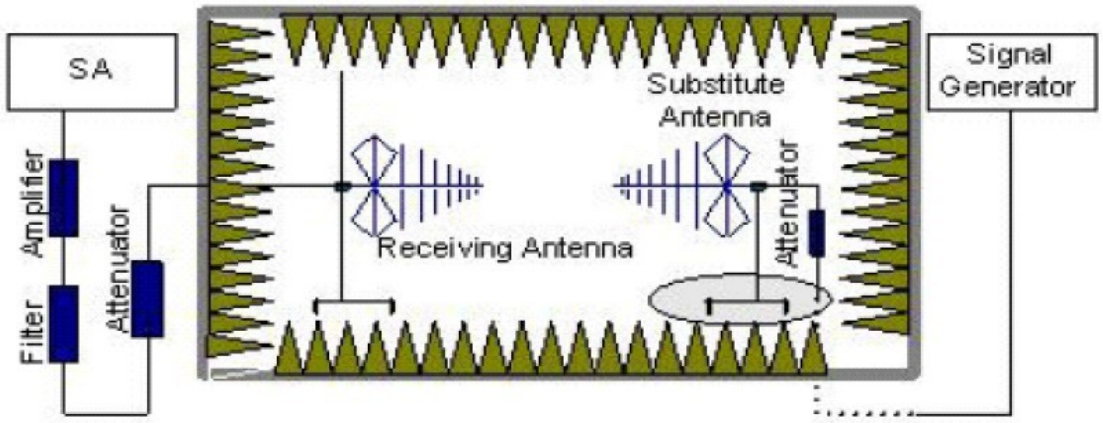

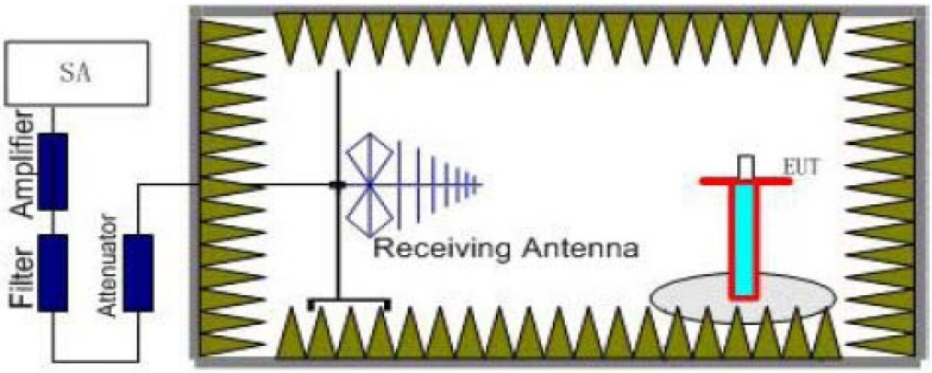

Test Results

Remark: We test all modulation type, and recorded the worst case at BLE 1M mode.

2402MHz

Frequency (MHz)	Result (dBm)	Factor (dB)	Result (dBm)	Limit (dBm)	Margin (dB)	ANT	Verdict
86.08	-56.13	-9.08	-65.21	-57	-8.21	Horizontal	Pass
449.28	-65.27	-1.39	-66.66	-57	-9.66	Horizontal	Pass
562.88	-71.31	1.02	-70.29	-57	-13.29	Horizontal	Pass
766.30	-66.48	4.30	-62.18	-57	-5.18	Horizontal	Pass
1268.60	-53.49	-4.85	-58.34	-47	-11.34	Horizontal	Pass
4990.30	-56.94	6.39	-50.55	-47	-3.55	Horizontal	Pass
--	--	--	--	--	--	--	-
89.34	-57.98	-8.98	-66.96	-57	-9.96	Vertical	Pass
147.95	-65.18	-5.07	-70.25	-57	-13.25	Vertical	Pass
320.65	-65.31	-4.16	-69.47	-57	-12.47	Vertical	Pass
518.96	-68.50	0.02	-68.48	-57	-11.48	Vertical	Pass
2952.00	-62.75	0.47	-62.28	-47	-15.28	Vertical	Pass
4324.75	-56.31	4.13	-52.18	-47	-5.18	Vertical	Pass
--	--	--	--	--	--	-	-

2480MHz

Frequency (MHz)	Result (dBm)	Factor (dB)	Result (dBm)	Limit (dBm)	Margin (dB)	ANT	Verdict
39.67	-61.30	-4.27	-65.57	-57	-8.57	Horizontal	Pass
321.41	-60.91	-4.14	-65.05	-57	-8.05	Horizontal	Pass
578.04	-68.48	1.36	-67.12	-57	-10.12	Horizontal	Pass
872.47	-67.40	5.99	-61.41	-57	-4.41	Horizontal	Pass
2969.60	-53.11	0.30	-52.81	-47	-5.81	Horizontal	Pass
3406.45	-58.56	1.50	-57.06	-47	-10.06	Horizontal	Pass
--	--	--	--	--	--	--	-
37.49	-62.00	-4.64	-66.64	-57	-9.64	Vertical	Pass
318.88	-62.24	-4.20	-66.44	-57	-9.44	Vertical	Pass
661.47	-65.80	2.71	-63.09	-57	-6.09	Vertical	Pass
896.61	-76.23	6.38	-69.85	-57	-12.85	Vertical	Pass
1619.75	-52.99	-4.45	-57.44	-47	-10.44	Vertical	Pass
8170.30	-64.42	11.81	-52.61	-47	-5.61	Vertical	Pass
--	--	--	--	--	--	-	-

3.8 Adaptivity

Limits

For Requirements and Limits please refer to EN 300 328 V2.2.2 (2019-07) Sub-clause 4.3.2.6.2.2

Test Procedure

1. The measurement procedure follows the clause 5.4.6.2.1 of the ETSI EN 300 328 V2.2.2 (2019-07).
2. For conducted measurements on device with multiple transmit chains and receive chains. The power splitter/combiner shall be used to combine all the transmit/receive chains (antenna outputs) into a single test point. The insertion loss of the power splitter/combiner shall be taken into account.
3. Interference signal shall be a100 % duty cycle interference signal is injected on the current operating channel of the UUT. This interference signal shall meet the requirements as follow:

   The 99 % bandwidth (the bandwidth containing 99 % of the power) of this inference signal shall be within a range from 120 % to 200 % of the Occupied Channel Bandwidth of the UUT with a minimum of 5 MHz, while the difference between the lowest and highest level within the Occupied Channel Bandwidth of the UUT shall be maximum 4 dB.
4. Blocking signal shell be a 100 % duty cycle CW signal, and The frequency and level shell be set as follow:

Equipment Type (LBT / non- LBT)	Wanted signal mean power from companion device	Blocking signal frequency [MHz]	Blocking signal power [dBm]	Type of interfering signal
LBT	sufficient to maintain the link (see note 2)	2 395 or 2 488,5 (see note 1)	-35	CW
Non-LBT	-30 dB			
NOTE 1: The highest frequency shall be used for testing operating channels within the range 2 400 MHz to 2 442 MHz, while the lowest frequency shall be used for testing operating channels within the range 2 442 MHz to 2 483,5 MHz. NOTE 2: A typical value which can be used in most cases is-50 dBm/MHz.				

5. The test not applicable to none-adaptive equipment and adaptive equipment which maximum RF Output power level is less than 10 dBm e.i.r.p.

Test Configuration

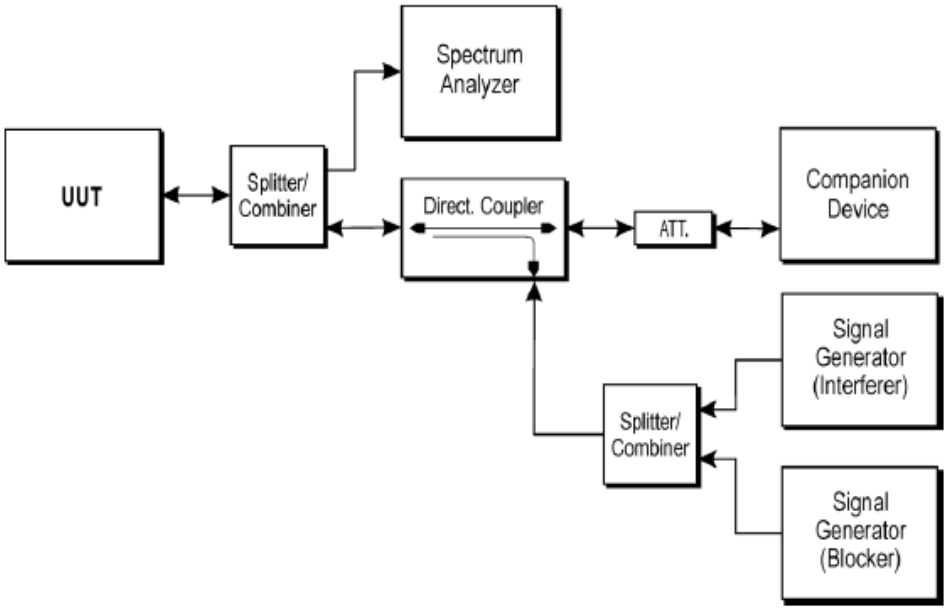

Test Results

Not applicable to this device which maximum RF Output power level is less than 10 dBm e.i.r.p.

3.9 Receiver Blocking

Limits

While maintaining the minimum performance criteria as defined in clause 4.3.1.12.3, the blocking levels at specified frequency offsets shall be equal to or greater than the limits defined for the applicable receiver category provided in table 6, table 7 or table 8.

Table 6: Receiver Blocking parameters for Receiver Category 1 equipment

Wanted signal mean power from companion device (dBm) (see notes 1 and 4)	Blocking signal frequency (MHz)	Blocking signal power (dBm) (see note 4)	Type of blocking signal
(-133 dBm + 10 × $\log_{10}$(OCBW)) or -68 dBm whichever is less (see note 2)	2 380 2 504	-34	CW
(-139 dBm + 10 × $\log_{10}$(OCBW)) or -74 dBm whichever is less (see note 3)	2 300 2 330 2 360 2 524 2 584 2 674		

NOTE 1: OCBW is in Hz.
NOTE 2: In case of radiated measurements using a companion device and the level of the wanted signal from the companion device cannot be determined, a relative test may be performed using a wanted signal up to P_{min} + 26 dB where P_{min} is the minimum level of wanted signal required to meet the minimum performance criteria as defined in clause 4.3.1.12.3 in the absence of any blocking signal.
NOTE 3: In case of radiated measurements using a companion device and the level of the wanted signal from the companion device cannot be determined, a relative test may be performed using a wanted signal up to P_{min} + 20 dB where P_{min} is the minimum level of wanted signal required to meet the minimum performance criteria as defined in clause 4.3.1.12.3 in the absence of any blocking signal.
NOTE 4: The level specified is the level at the UUT receiver input assuming a 0 dBi antenna assembly gain. In case of conducted measurements, this level has to be corrected for the (in-band) antenna assembly gain (G). In case of radiated measurements, this level is equivalent to a power flux density (PFD) in front of the UUT antenna with the UUT being configured/positioned as recorded in clause 5.4.3.2.2.

Table 7: Receiver Blocking parameters receiver Category 2 equipment

Wanted signal mean power from companion device (dBm) (see notes 1 and 3)	Blocking signal frequency (MHz)	Blocking signal power (dBm) (see note 3)	Type of blocking signal
(-139 dBm + 10 × $\log_{10}$(OCBW) + 10 dB) or (-74 dBm + 10 dB) whichever is less (see note 2)	2 380 2 504 2 300 2 584	-34	CW

NOTE 1: OCBW is in Hz.
NOTE 2: In case of radiated measurements using a companion device and the level of the wanted signal from the companion device cannot be determined, a relative test may be performed using a wanted signal up to P_{min} + 26 dB where P_{min} is the minimum level of wanted signal required to meet the minimum performance criteria as defined in clause 4.3.1.12.3 in the absence of any blocking signal.
NOTE 3: The level specified is the level at the UUT receiver input assuming a 0 dBi antenna assembly gain. In case of conducted measurements, this level has to be corrected for the (in-band) antenna assembly gain (G). In case of radiated measurements, this level is equivalent to a power flux density (PFD) in front of the UUT antenna with the UUT being configured/positioned as recorded in clause 5.4.3.2.2.

Table 8: Receiver Blocking parameters receiver Category 3 equipment

Wanted signal mean power from companion device (dBm) (see notes 1 and 3)	Blocking signal frequency (MHz)	Blocking signal power (dBm) (see note 3)	Type of blocking signal
(-139 dBm + 10 × $\log_{10}$(OCBW) + 20 dB) or (-74 dBm + 20 dB) whichever is less (see note 2)	2 380 2 504 2 300 2 584	-34	CW
NOTE 1: OCBW is in Hz. NOTE 2: In case of radiated measurements using a companion device and the level of the wanted signal from the companion device cannot be determined, a relative the test may be performed using a wanted signal up to P_{min} + 30 dB where P_{min} is the minimum level of wanted signal required to meet the minimum performance criteria as defined in clause 4.3.1.12.3 in the absence of any blocking signal. NOTE 3: The level specified is the level at the UUT receiver input assuming a 0 dBi antenna assembly gain. In case of conducted measurements, this level has to be corrected for the (in-band) antenna assembly gain (G). In case of radiated measurements, this level is equivalent to a power flux density (PFD) in front of the UUT antenna with the UUT being configured/positioned as recorded in clause 5.4.3.2.2.			

Test Configuration

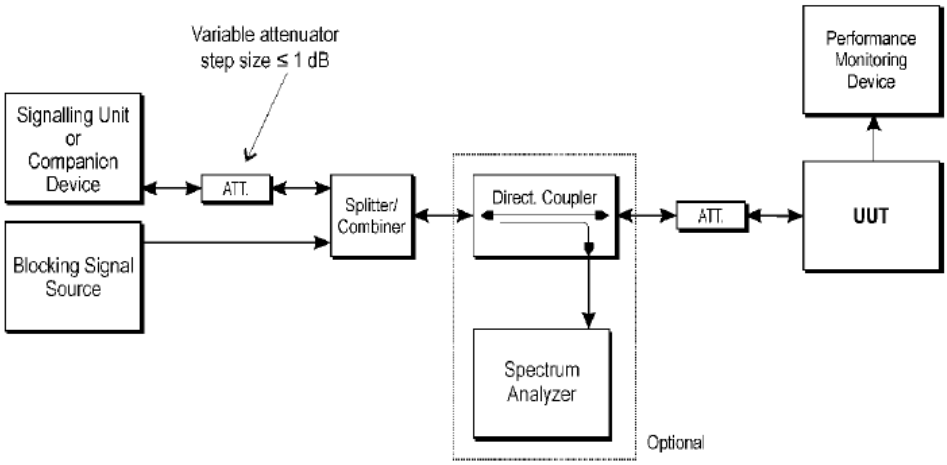

Test Procedure

The procedure in step 1 to step 6 below shall be used to verify the receiver blocking requirement as described in clause 4.3.1.12 or clause 4.3.2.11.

Step 1:
• For non-FHSS equipment, the UUT shall be set to the lowest operating channel on which the blocking test has to be performed (see clause 5.4.11.1).

Step 2:
• The blocking signal generator is set to the first frequency as defined in the appropriate table corresponding to the receiver category and type of equipment.

Step 3:
• With the blocking signal generator switched off, a communication link is established between the UUT and the associated companion device using the test setup shown in figure 6.

• Unless the option provided in note 2 of the applicable table referred to in clause 5.4.11.2.1 is used, the level of the wanted signal shall be set to the value provided in the table corresponding to the receiver category and type of equipment. The test procedure defined in clause 5.4.2, and more in particular clause 5.4.2.2.1.2, can be used to measure the (conducted) level of the wanted signal however no correction shall be made for antenna gain of the companion device (step 6 in clause 5.4.2.2.1.2 shall be ignored). This level may be measured directly at the output of the companion device and a correction is made for the coupling loss into the UUT.

• When the option provided in note 2 of the applicable table referred to in clause 5.4.11.2.1 is used, the attenuation of the variable attenuator shall be increased in 1 dB steps to a value at which the minimum performance criteria as specified in clause 4.3.1.12.3 or clause 4.3.2.11.3 is still met. The resulting level for the wanted signal at the input of the UUT is Pmin. This signal level (Pmin) is increased by the value provided in note 2 of the applicable table corresponding to the receiver category and type of equipment.

Step 4:
• The blocking signal at the UUT is set to the level provided in the table corresponding to the receiver category and type of equipment. Where the manufacturer has declared the actual antenna gain for each of the applicable blocking frequencies (see clause 5.4.1 m) ii)) this blocking level shall be adjusted for the difference between the in-band antenna assembly gain (G) and the actual antenna gain for the blocking frequency being tested. See also note 5 in table 6, note 4 in table 7 and note 4 in table 8 or note 5 in table 14, note 4 in table 15 and note 4 in table 16. Where the actual antenna gains at the blocking frequencies have not been declared, then the antenna gain at the blocking frequencies shall be assumed identical to the in-band antenna gain.

• If the performance criteria as specified in clause 4.3.1.12.3 or clause 4.3.2.11.3 is met then proceed to step 6.

Step 5:
• If the performance criteria as specified in clause 4.3.1.12.3 or clause 4.3.2.11.3 is not met, step 3 and step 4 shall be repeated after that the frequency of the blocking signal set in step 2 has been increased with a value equal to the occupied channel bandwidth except:
- For the blocking frequency 2 380 MHz, where this frequency offset shall be less than or equal to 10 MHz. If this frequency offset is more than 7 MHz, the level of the wanted signal shall be increased by 3 dB.
- For the blocking frequency 2 503,5 MHz, where this frequency offset shall be less than or equal to 10 MHz. If this frequency offset is more than 7 MHz, the level of the wanted signal shall be decreased by 3 dB.

• If the performance criteria as specified in clause 4.3.1.12.3 or clause 4.3.2.11.3 is not met, step 3 and step 4 shall be repeated after that the frequency of the blocking signal set in step 2 has been decreased with a value equal to the occupied channel bandwidth except:
- For the blocking frequency 2 380 MHz, where this frequency offset shall be less than or equal to 10 MHz. If this frequency offset is more than 7 MHz, the level of the wanted signal shall be decreased by 3 dB.
- For the blocking frequency 2 503,5 MHz, where this frequency offset shall be less than or equal to 10 MHz. If this frequency offset is more than 7 MHz, the level of the wanted signal shall be increased by 3 dB.

• If the performance criteria as specified in clause 4.3.1.12.3 or clause 4.3.2.11.3 is still not met, the UUT fails to comply with the Receiver Blocking requirement and step 6 and step 7 are no longer required.

• It shall be recorded in the test report whether the shift of blocking frequencies as described in the present step was used.

Step 6:
• Repeat step 4 and step 5 for each remaining combination of frequency and level for the blocking signal as provided in the table corresponding to the receiver category and type of equipment.

Step 7:
• For non-FHSS equipment, repeat step 2 to step 6 with the UUT operating at the highest operating channel on which the blocking test has to be performed (see clause 5.4.11.1).

Step 8:
• It shall be assessed and recorded in the test report whether the UUT complies with the Receiver Blocking requirement.

Test result

Raw data reference to Appendix Test Data for BT_BLE.

4 TEST SETUP PHOTOS

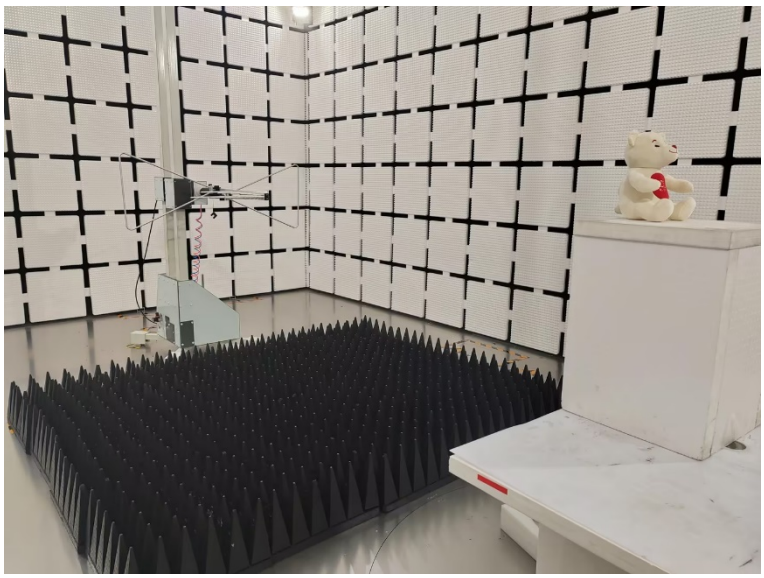

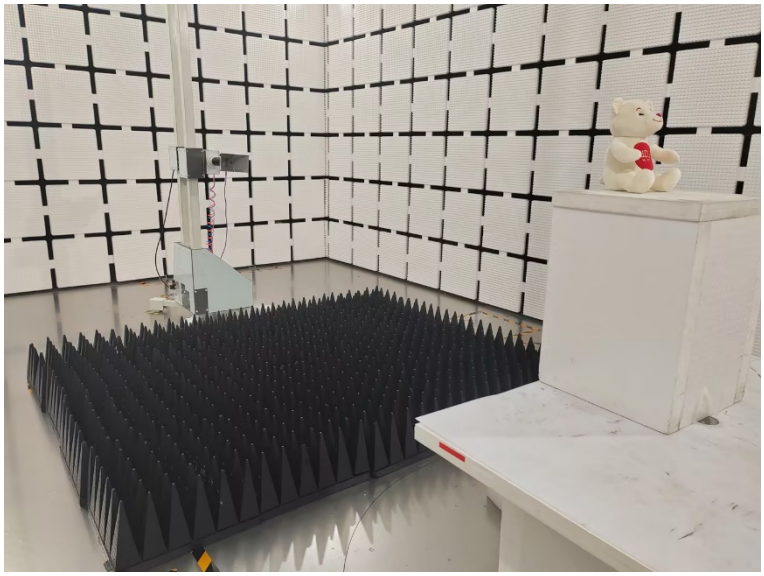

5 PHOTOS OF THE EUT

Please refer to test report AiTSZ-260127049CW1

********** **End of Report** **********